B8WBINFINNVS

8' INFINITY STYLE INNOVATED BENCH WITH BACK INGROUND MOUNT DESIGN

WEBCOAT PRODUCTS
P.O. BOX 3160
McALESTER, OKLAHOMA 74501
1-800-505-5101
FAX: (918)426-5924
E-MAIL: WEBCOAT@WEBCOAT.COM

Please take the time to locate and identify each part. Assemble the units on a smooth flat surface. It is also helpful to lay the tops and seats on cardboard or a drop cloth to prevent scratching of the surface during assembly. All parts have been pre-cut and pre-drilled for ease of assembly. All holes are slotted to allow for easy assembly and for final levelling of tops and seats to frames. Fully assemble all parts without totally tightening nuts and bolts. After all assembled go back and retighten nuts to bolts. DO NOT OVER TIGHTEN NUTS TO BOLTS. Over tightened nuts can crack the plastisol coating. All the necessary quantities of parts required are listed in this assembly instructions.

DO NOT BEGIN ASSEMBLY UNTIL YOU HAVE READ THESE INSTRUCTIONS AND ARE FAMILIAR WITH THE PARTS.

PARTS IDENTIFICATION

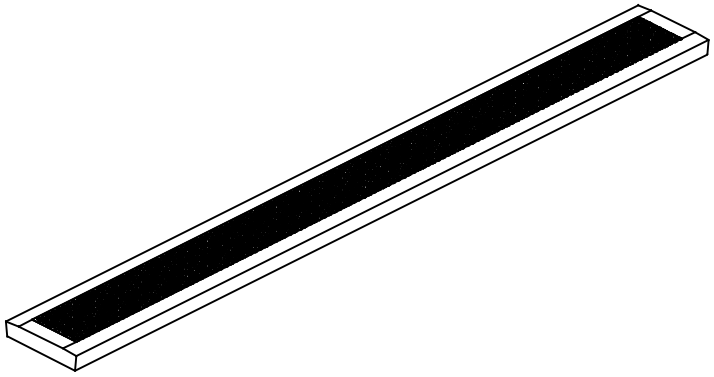

(A) 8' INF INNV SEAT

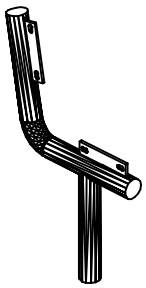

(B) BENCH FRAME

PARTS LIST

ITEM	PART#	DESCRIPTION	QTY.
A	S8INFINNV	8' INF INNV SEAT	2
B	FBWBI	BENCH FRAME W/BACK	2

ITEM	HARDWARE DESCRIPTION	QTY.
HW1	5/16" X 18 NYL LOCKNUTS	8
HW2	5/16" X 18GA CAP BOLTS	8
HW3	5/16" FLAT WASHERS	16
HW4	BOLT GUARDS	8

ASSEMBLY TOOLS REQUIRED

2- 1/2" WRENCHES

HARDWARE IDENTIFICATION

(HW1) 5/16" X 18
NYL LOCKNUTS

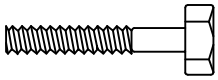

(HW2) 5/16" X 18
GAUGE CAP BOLTS

(HW3) 5/16"
FLAT WASHERS

(HW4) BOLT
GUARDS

ASSEMBLY PROCEDURES

STEP 1

MOUNT THE SEAT BY MEANS OF FOUR 5/16" X 1 1/2" HEXBOLTS, EIGHT 5/16" FLAT WASHERS AND FOUR 5/16" NYLOCK NUTS THROUGH THE SLOTTED HOLES ON THE SEATS AND THROUGH THE SLOTTED HOLES ON ANGLE IRON OF FRAME ENDS. Hand tighten only at this time.

STEP 2

MOUNT THE BACK BY MEANS OF FOUR 5/16" X 1 1/2" HEXBOLTS, EIGHT 5/16" FLAT WASHERS AND FOUR 5/16" NYLOCK NUTS THROUGH THE SLOTTED HOLES ON THE SEATS AND THROUGH THE SLOTTED HOLES ON ANGLE IRON OF FRAME ENDS.

STEP 3

FOLLOWING THE FOOTING DIAGRAM BELOW, DIG TWO INLINE HOLES APPROXIMATELY 24" DEEP BY 12" ROUND.

STEP 4

SET BENCH END FRAMES IN HOLES. MAKE SURE TOP OF SEATS ARE 18" ABOVE GROUND LEVEL AND ARE IN LINE. FILL WITH CONCRETE, LEVEL SEAT.

LET STAND 24 HOURS BEFORE COMPLETING ASSEMBLY INSTRUCTIONS.

STEP 5

TIGHTEN ALL NUTS ON ALL BOLTS AND PLACE THE BOLT GUARDS ON ALL NUTS. **DO NOT OVER TIGHTEN THE NUTS AS THIS COULD CAUSE THE PLASTISOL COATING TO CRACK.**

ANGLE BOLTS TO INSIDE OF BRACE, FACING EACH OTHER.

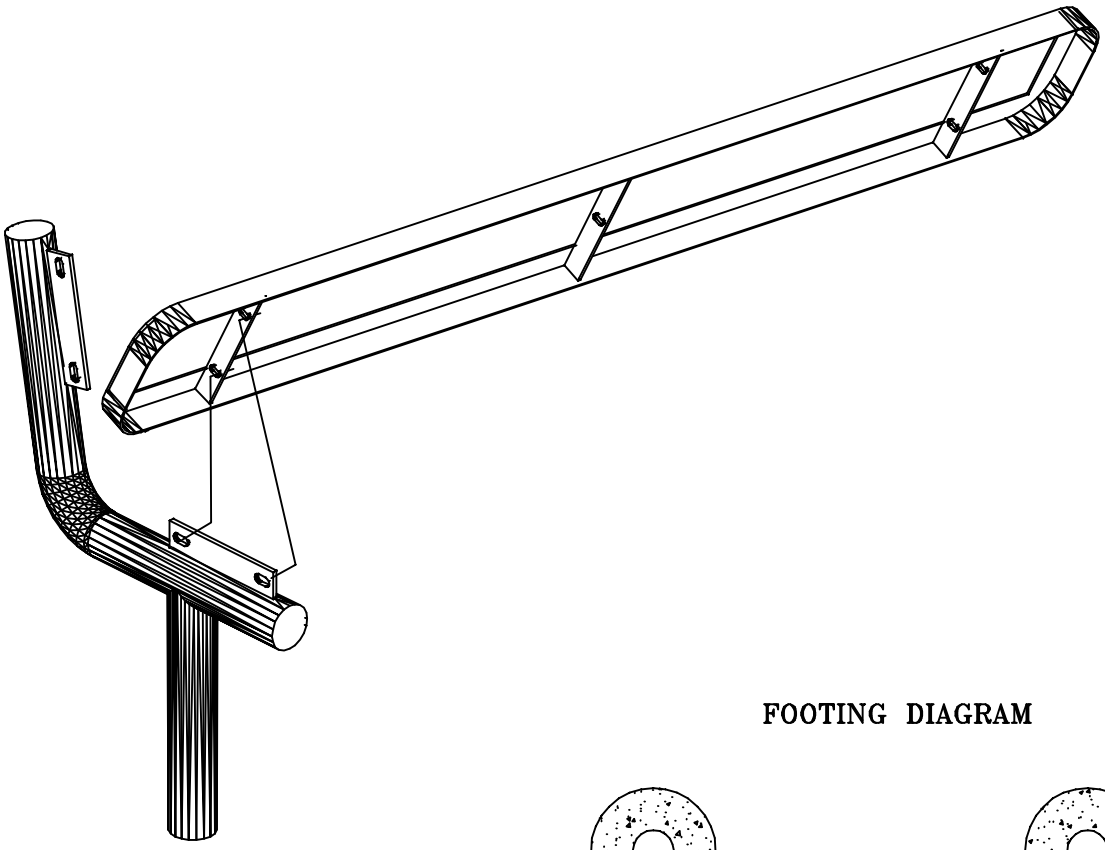

FOOTING DIAGRAM

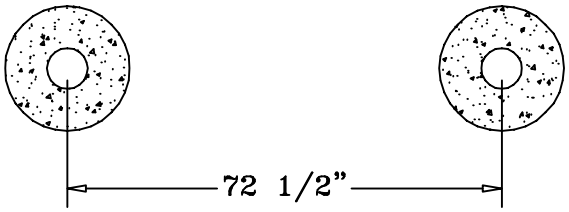

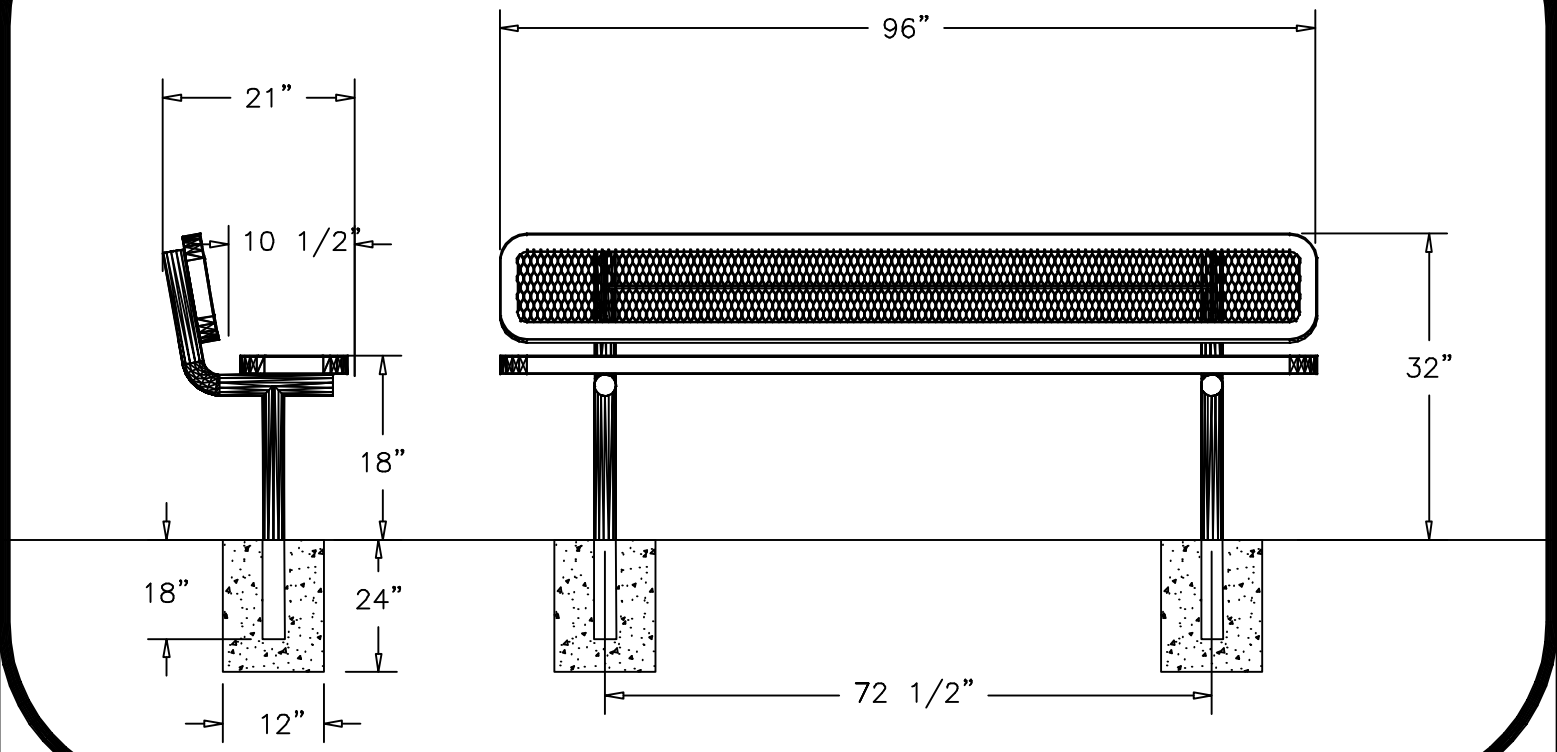

SPECIFICATIONS

8’ POLY VINYL COATED PUNCHED STEEL BENCH BENCH WITH BACK.
EDGES ARE ANGLED AND SLOPED. FRAME IS INGROUND MOUNT DESIGN.

COATED WITH A 1/8” TO 1/4” THICK PLASTISOL ULTRAVIOLET STABILIZED VINYL COATING FUSED AND BAKED TO A 90% GLOSS.

SEAT HEIGHT IS 18” APPROXIMATELY, BENCH HEIGHT IS 32” APPROXIMATELY.
TOTAL OVERALL DIMENSIONS ARE 96” X 21” APPROXIMATELY.

SEATS ARE MADE FROM 11GA 1/2” HOLE PRECISION PUNCHED STEEL,
AND CORNERS. ALL CENTER BRACES ARE MADE FROM 1/4” X 1 1/2” FLAT STEEL.

FRAMES ARE MADE OF 2 3/8” HEAVY GALVANIZED STEEL TUBING THAT IS GALVANIZED INSIDE AND OUT AND MEETS OR EXCEEDS YIELD AND TENSILE OF SCH. 40 PIPE.
CONSTRUCTED SO AS TO PROHIBIT RAIN WATER FROM COLLECTING AT GROUND LEVEL.
COATED WITH A BAKED ON POLYESTER POWDER COAT FINISH.

ALL HARDWARE IS NON-CORROSIVE.
WEIGHT FOR THE B8WBINFINNVS IS 179 LBS.

MAINTENANCE

To maintain luster it is recommended to wash, rinse, and dry the units after prolonged use. Check for loose bolts and nuts and tighten as needed. Contact the factory for genuine Webcoat part replacements if needed.