T46WEBCLASS-3S

46" CLASSIC STYLE
3 SEAT WEB TABLE
INGROUND MOUNT DESIGN

WEBCOAT PRODUCTS
P.O. BOX 3160
McALESTER, OKLAHOMA 74501
1-800-505-5101
FAX: (918)426-5924
E-MAIL: WEBCOAT@WEBCOAT.COM

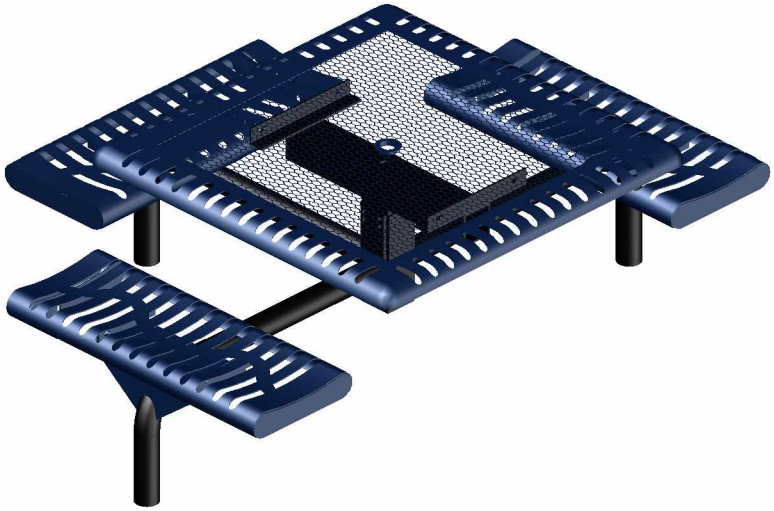

Please take the time to locate and identify each part. Assemble the units on a smooth flat surface. It is also helpful to lay the tops and seats on cardboard or a drop cloth to prevent scratching of the surface during assembly. All parts have been pre-cut and pre-drilled for ease of assembly. All holes are slotted to allow for easy assembly and for final levelling of tops and seats to frames. Fully assemble all parts without totally tightening nuts and bolts. After all assembled go back and retighten nuts to bolts. DO NOT OVER TIGHTEN NUTS TO BOLTS. Over tightened nuts can crack the plastisol coating. All the necessary quantities of parts required are listed in this assembly instructions.

DO NOT BEGIN ASSEMBLY UNTIL YOU HAVE READ THESE INSTRUCTIONS AND ARE FAMILIAR WITH THE PARTS.

PARTS IDENTIFICATION

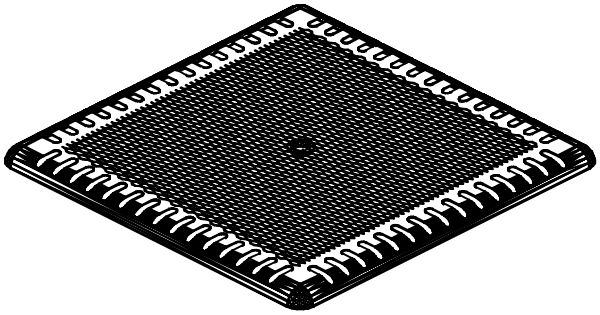

(A) 46" CLASS TOP

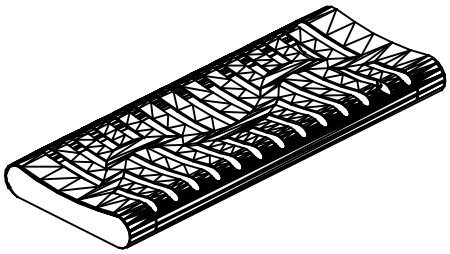

(B) 38" CLASS SEAT

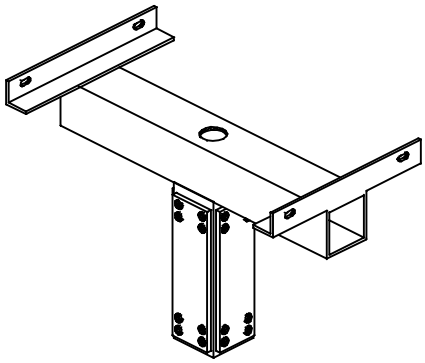

(C) CENTER POST

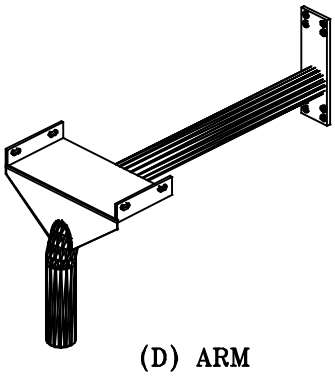

(D) ARM

PARTS LIST

ITEM	PART#	DESCRIPTION	QTY.
A	TT46CLASS	46" SQ. CLASSIC TOP	1
B	S38CLASS	38" CLASSIC SEAT	3
C	FCPED	CENTER POST	1
D	PEDARMWEBS	WEB ARM	3

ITEM	HARDWARE DESCRIPTION	QTY.
HW1	5/16" X 18 NYL LOCKNUTS	16
HW2	5/16" X 18GA CAP BOLTS	16
HW3	5/16" FLAT WASHERS	32
HW4	BOLT GUARDS	16
HW5	5/8" BOLTS	8
HW6	5/8" NUTS	8

ASSEMBLY TOOLS REQUIRED

2- 1/2" WRENCHES

HARDWARE IDENTIFICATION

(HW1) 5/16" X 18
NYL LOCKNUTS

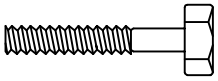

(HW2) 5/16" X 18
GAUGE CAP BOLTS

(HW5) 5/8" NUTS

(HW3) 5/16"
FLAT WASHERS

(HW4) BOLT
GUARDS

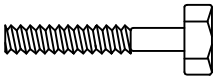

(HW6) 5/8" BOLTS

ASSEMBLY PROCEDURES

STEP 1

BOLT THE FOUR ARMS TO THE CENTER POST USING EIGHT 5/8" BOLTS AND EIGHT 5/8" NUTS, Hand tighten at this time.

STEP 2

SET THE TOP ON THE CENTER POST ALIGNING HOLES IN TOP BRACES WITH HOLES IN THE ANGLE IRON ON CENTER POST. FASTEN WITH FOUR 5/16" BOLTS, EIGHT WASHERS AND FOUR 5/16" NUTS. Hand tighten at this time.

STEP 3

SET SEATS ON THE SEAT BRACKETS OF THE ARMS. BRACES ON SEAT SHOULD SET TO THE OUTSIDE OF THE SEAT BRACKET ON THE ARM.
FASTEN WITH FOUR 5/16" BOLTS, EIGHT WASHERS AND FOUR 5/16" NUTS PER SEAT.

STEP 4

FOLLOWING THE POST PLACEMENT DIAGRAM BELOW: DIG FOUR HOLES APPROXIMATELY 24" DEEP X 12" ROUND SET POSTS IN HOLES; MAKING SURE THAT THE OUTSIDE POSTS' ANGLE IRONS ARE FACING EACH OTHER.
DROP IN A PLUMB AND LEVEL POSITION.

STEP 5

POUR ALL CONCRETE AND LET STAND FOR 24 HOURS BEFORE COMPLETING THESE ASSEMBLY INSTRUCTIONS.

STEP 6

TIGHTEN ALL BOLTS LEVELING AND SLIGNING PARTS AS YOU GO.
DO NOT OVER TIGHTEN AS THIS WILL CAUSE THE PLASTISOL COATING TO CRACK.

1	CAP BOLT & WASHER
2	WASHER & LOCK NUT

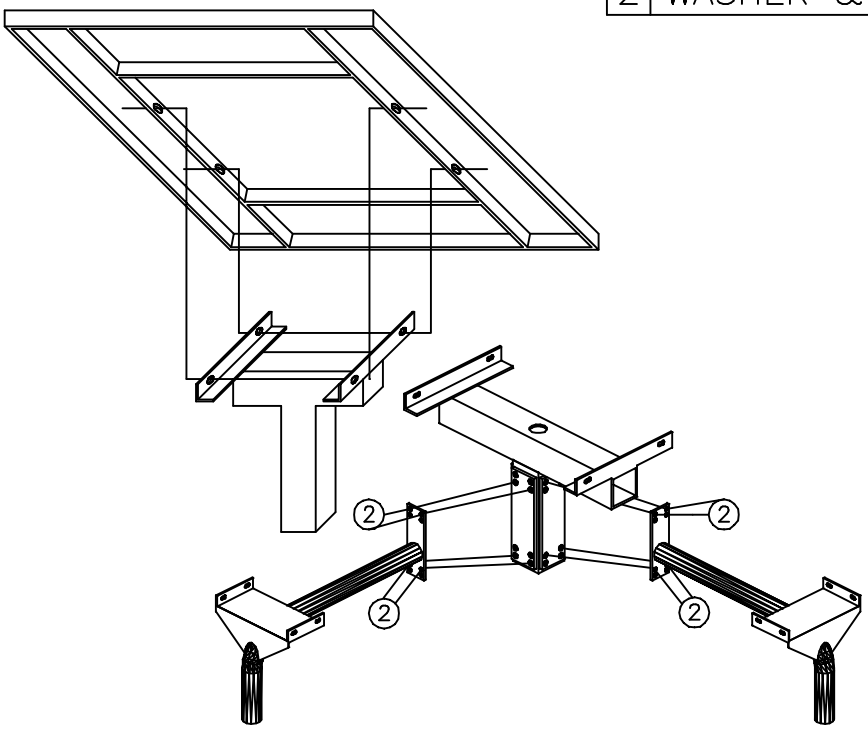

FOOTING DIAGRAM

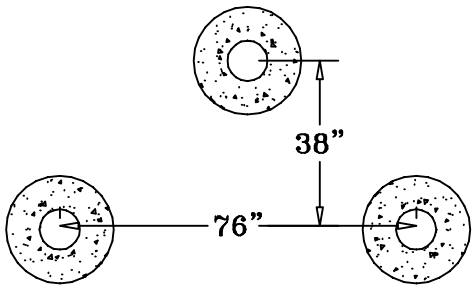

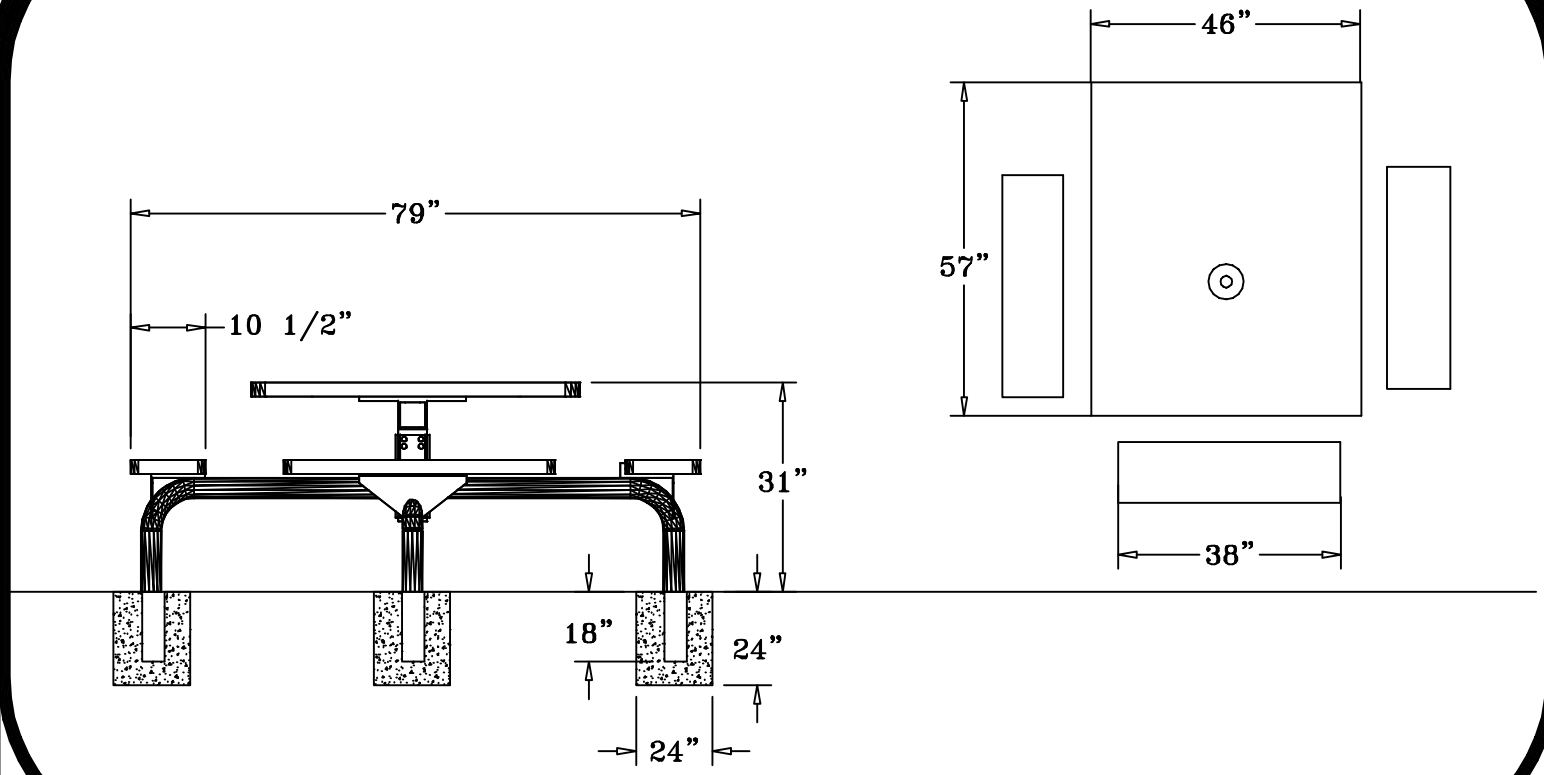

SPECIFICATIONS

46” X 57” PRECISION PUNCHED STEEL TABLE WITH THREE ATTACHED 38” X 12” SEATS. ALL EDGES AND CORNERS ARE ROLLED. FRAME IS INGROUND MOUNT PEDESTAL DESIGN.

COATED WITH A 1/8” TO 1/4” THICK PLASTISOL ULTRAVIOLET STABILIZED VINYL COATING FUSED AND BAKED TO A 90% GLOSS.

TABLE HEIGHT IS 31” APPROXIMATELY. SEAT HEIGHT IS 18” APPROXIMATELY. TOTAL OVERALL SQUARED DIMENSION IS 79”.

TOP IS MADE OF 11GA BORDER WITH 3/4” #9 EXPANDED METAL. SEATS ARE 11GA CUT OUT WITH 11GA BRACES. TOP AND SEATS ARE ROLLED TO A 2” ø TO FORM A SMOOTH ROUNDED EDGE.

FRAMES ARE 2 7/8” PIPE WITH 1/4” PLATES FOR MOUNTING CENTER POST AND 11GA SEAT BRACKEST. CENTER POST IS 4” X 4” SQ TUBING. COATED WITH A BAKED ON POLYESTER POWDER COAT FINISH.

ALL HARDWARE IS NON-CORROSIVE.
WEIGHT FOR THE T46WEBCLASS-3S IS 246 LBS.

MAINTENANCE

To maintain luster it is recommended to wash, rinse, and dry the units after prolonged use. Check for loose bolts and nuts and tighten as needed. Contact the factory for genuine Webcoat part replacements if needed.